

The Mercedes-Benz Sprinter.

Panel van models.

Prices effective from September 2024.

Mercedes-Benz



RETURN TO START

Contents

- **Model overview** 3
- **Trims**
  - Sprinter PRO 4
  - Sprinter SELECT 5
- **Colours and Upholstery** 6
- **MBUX infotainment system** 7
- **Equipment** 8
- **Engine and gearbox** 20
- **Fuel consumption** 21
- **Weights and payloads** 23
- **Dimensions** 24
- **List prices** 33
- **Finance Options** 34
- **The Mercedes-Benz App** 35
- **Approved Used** 36
- **Aftercare** 37

Please note
This document provides information about the model range line-up and specifications of the Sprinter. It also contains key details about options, economy and performance of all variants. Details are correct at time of publication and are subject to revision. Any images used in this document may not reflect UK specification and are for illustrative purposes only. Images may show optional equipment which does not form part of UK standard specification.

The Mercedes-Benz Sprinter.

RETURN TO START

Available in 2 emission categories:
Euro 6e (Light duty)
Euro VI (Heavy duty)

1 model:



Panel van – 3 seats

3 lengths:



L2



L3



L4

1 height:



H2

2 trims:



PRO



SELECT

Discover more about the other Mercedes-Benz Sprinter models in our range:

› **The Sprinter Chassis and Chassis Crewcab**

The Sprinter PRO.

All panel vans come with the following equipment as standard:

Interior

- TEMPMATIC air conditioning
- Multifunction steering wheel
- Height and rake adjustable steering wheel
- Instrument cluster with colour display
- Armrest for driver's seat
- Co-driver's double seat
- Grab handles for driver's and co-driver's doors
- USB socket, 5 V
- Stowage compartment underneath cockpit
- Shelf above windscreen
- Maturin black fabric

Exterior

- Electrically foldable and adjustable, heated exterior mirrors
- 16" Steel wheels

Load Area

- Full-length partition
- Double-wing rear doors, opening to side wall
- Wood flooring
- Towing eye rear
- Spare wheel

Safety, security and connectivity

- Active Brake Assist
- Reversing camera
- Blind Spot Assist
- Crosswind Assist
- Active Lane Keeping Assist
- Intelligent Speed Assistant
- ATTENTION ASSIST
- Headlight assistant
- Tyre pressure monitoring front and rear
- Breakdown management
- Hill-Start Assist
- Cruise control
- Rain sensor
- Driver's and Co-driver's airbag
- Anti-theft protection package and double locks

Technology

- MBUX Multimedia system
- Digital radio (DAB)
- Acoustic package
- Pre-installation: Remote services plus
- Smartphone integration package

From £48,460*

* Based on a 315 Van L2 H2 PRO RWD

- **3 Lengths available:**
  L2: 5,932mm L3: 6,967mm L4: 7,367mm

› **Arrange a test drive at your nearest Dealership**







The Sprinter SELECT.

Upgrade from PRO to SELECT to get all of the additional equipment listed below:

Interior

- Leather covered steering wheel and shift lever
- Comfort driver's seat
- Lumbar support for driver's seat
- Convenience head restraint, driver's seat
- Cup holders in front
- Electrically powered hot-air auxiliary heater
- Hinged lid for stowage compartment

Exterior

- Radiator grille frame in body colour
- Front & rear mud flaps

Technology

- Charging package, dashboard
- Highbeam Assist
- LED High Performance headlamps

From £51,155 *

* Based on a 315 Van L2 H2 SELECT RWD

- **3 Lengths available:**
  L2: 5,932mm L3: 6,967mm L4: 7,367mm

› **Arrange a test drive at your nearest Dealership**







Colours and upholstery.

Solid paints



Arctic White
(Standard on the Sprinter panel van)



Jupiter Red



Steel Blue



Jet Black

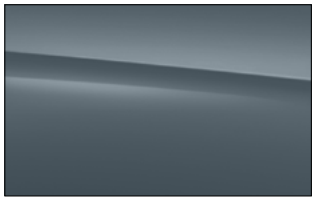

Blue Grey

Metallic paints



Tenorite Grey Metallic

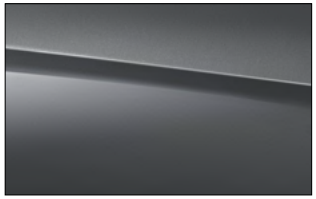

Selenite Grey Metallic



Obsidian Black Metallic

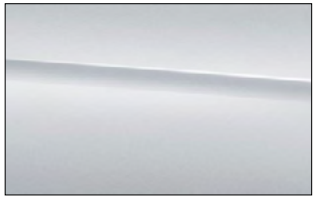

High Tech Silver Metallic

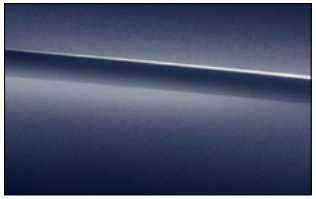

Cavansite Blue Metallic

Interior upholstery



Maturin black fabric (Standard)



Caluma black fabric



Black ARTICO man-made leather

› **For upholstery pricing, see page 14**

Due to limitations of on-screen representation, the vehicle colours may differ in reality to the on-screen images.

MBUX – the Mercedes-Benz User Experience infotainment system.

The Mercedes-Benz state-of-the-art infotainment system now has increased computing power, improved functionality in controlling vehicle functions and better compatibility with mobile devices.

It includes the following features:

Standard features

- 2-way front speaker, 4 x 25 W output, sound settings, separate volume settings for audio and phone
- AM/FM radio with dual tuner
- Bluetooth connectivity with audio streaming
- Center-fill speakers for improved sound quality and voice output
- Digital Instruction Manual
- Extensive personalization options with up to seven profiles[2]
- High-resolution 10.25-inch touchscreen (1,920 x 720 pixels)
- LINGUATRONIC voice control with optimized, intuitive voice assistant
- Multimedia interface with three backlit 18 W PPS USB-C ports
- Online Music[1,2]: Tidal, Amazon Music, Spotify.
- Over-the-air (OTA) updates[2]
- Seat-based voice recognition for driver and front passenger[3]
- Wi-Fi hotspot
- Wireless remote UI connection for Apple CarPlay and Android Auto[4]



1 Service Entertainment Package required
2 via The Mercedes-Benz App
3 only together with comfort overhead control panel (LC4)
4 Apple CarPlay and Android Auto is only available in conjunction with E4S – Smartphone integration package

Equipment (standard and optional overview).

RETURN TO START

Key: ● Standard ○ Optional — Not available

Category	Description	Option code	Rear-wheel drive PRO	Rear-wheel drive SELECT	Basic Price exc. VAT	Basic Price inc. VAT
Exterior Features						
Axle	**Front axle with upgraded axle load** PRO, Optional on L4 models. SELECT, Optional on 319, 515, 517 and 519 L4 models.	A50	●	●	–	–
	Rear axle springs for increased payload Optional on 315 and 319 Panel Van models.	C83	○	○	£335.00	£402.00
Body	**Front bumper painted in vehicle colour**	CN3	○	○	£530.00	£636.00
	Pre-installation tailpipe for body builders	K61	○	○	£75.00	£90.00
Bulkhead	**Full-length partition**	D50	●	●	–	–
	Full-width partition with window	D51	○	○	£95.00	£114.00
	Prov.f.retrofitting of partition	D62	○	○	£0.00	£0.00
	Omission partition	D93	○	○	£0.00	£0.00
Exhaust	**Exhaust ending laterally behind rear axle** Not available for 5 tonne models.	K63	○	○	£145.00	£174.00
Fuel Tank	**Main tank 71 litres**	K13	○	○	£0.00	£0.00
	AdBlue filler cap, lockable	K53	○	○	£25.00	£30.00
	Main tank, 93 litres	KB7	●	●	–	–
	Fuel filter with water separator	KL5	○	○	£195.00	£234.00
Gearbox	**9G-TRONIC**	G43	○	○	£2,110.00	£2,532.00
	6-speed ECO Gear manual transmission Not available on 319 and 519 models.	GD8	●	●	–	–
	6-speed ECO Gear High Torque manual transmission Standard on 319 and 519 models.	GD9	●	●	–	–

Changes to individual option availability and combinations may occur depending on vehicle specification choices and the continuing evolution and adaptation of our product range. These changes may not be immediately reflected in this document as they occur, but will be introduced at the next revision opportunity.

Equipment (standard and optional overview).

● Standard ○ Optional — Not available

RETURN TO START

Category	Description	Option code	Rear-wheel drive PRO	Rear-wheel drive SELECT	Basic Price exc. VAT	Basic Price inc. VAT
Exterior Features (cont.)						
Loading Doors	**Sliding door right**	T16	○	○	£1,260.00	£1,512.00
	Sliding door left	T19	●	●	–	–
	Electr. closing assist, sliding door right	T50	○	○	£430.00	£516.00
	Electr. closing assist, sliding door left	T51	○	○	£430.00	£516.00
	Electrical operation of sliding door, right	T55	○	○	£1,185.00	£1,422.00
	Electrical operation of sliding door, left	T56	○	○	£1,185.00	£1,422.00
	Rear doors, double-wing, opening to side wall	W54	●	●	–	–
	Rear door step	W73	○	○	£195.00	£234.00
Mirrors	**Electrically foldable exterior mirrors**	F64	●	●	–	–
	Exterior mirror heated and electr. adjustable	F68	●	●	–	–
	Exterior mirrors without indicators	FU5	○	○	£0.00	£0.00
Mud flaps	**Front mud flaps**	P47	○	●	£60.00	£72.00
	Rear mud flaps	P48	○	●	£110.00	£132.00
Paint	**Painted bumper**	CM0	○	○	£650.00	£780.00
	Radiator grille frame in vehicle colour	CN2	○	●	£120.00	£144.00
	Chrome-plated radiator grille	FK3	○	○	£275.00	£330.00
Roof	**High roof H2**	D03	●	●	–	–
	H1 in lieu of H2 Optional on L2 models.	D03O	○	○	£0.00	£0.00
Suspension	**Air suspension – run-on module 30 min**	C1N	○	○	£215.00	£258.00
	Air suspension for rescue vehicles	C1R	○	○	£115.00	£138.00
	Air suspension – pre-installation, control switch, rear	C1V	○	○	£100.00	£120.00
	Air suspension – actuation, speed signal	C2A	○	○	£115.00	£138.00
	Air suspension – control switch at rear Only for 3 tonne models.	C2H	○	○	£190.00	£228.00
	Air suspension – control switch, instrument panel	C2I	○	○	£180.00	£216.00

Changes to individual option availability and combinations may occur depending on vehicle specification choices and the continuing evolution and adaptation of our product range.
These changes may not be immediately reflected in this document as they occur, but will be introduced at the next revision opportunity.

Equipment (standard and optional overview).

● Standard ○ Optional — Not available

RETURN TO START

Category	Description	Option code	Rear-wheel drive PRO	Rear-wheel drive SELECT	Basic Price exc. VAT	Basic Price inc. VAT
Exterior Features (cont.)						
Suspension (cont.)	**Air suspension – valve for emergency filling**	C2V	○	○	£165.00	£198.00
	Suspension for comfort and load protection	CB1	○	○	£295.00	£354.00
	Comfort suspension, air suspension	CB2	○	○	£3,930.00	£4,716.00
	Stabilisation level III	CB4	○	○	£1,100.00	£1,320.00
	Stabilisation level I	CB7	●	●	–	–
	Stabilisation level II	CB8	○	○	£885.00	£1,062.00
	Deletion, vehicle lowering Available for 3 tonne vehicles. Optional on L2 models.	CW2	●	●	–	–
	Longitudinal member reinforcement	Q11	●	●	–	–
Tyres	**Tyres without name of make**	RD9	●	●	–	–
	Make of tyres Continental (10)	RF1	○	○	£0.00	£0.00
	Make of tyres Michelin (80) Not available for 5 tonne models.	RF8	○	○	£0.00	£0.00
	Make of tyres Goodyear (90)	RF9	○	○	£0.00	£0.00
	Tyres 205/75 R 16 C Only for 5 tonne models. Optional for L4 models.	RG3	●	●	–	–
	Tyres 225/75 R16 C Optional for 319 models.	RG8	○	○	£0.00	£0.00
	Tyres 235/65 R16 C Not available for 5 tonne models.	RH2	●	●	–	–
	Tyres 235/60 R17 C Not available for 5 tonne models.	RH3	○	○	£0.00	£0.00
	All-season tires	RM0	○	○	£125.00	£150.00
	M+S tyres	RM1	○	○	£295.00	£354.00
	Summer tyres	RM7	●	●	–	–
	Tyre pressure monitoring front/rear, wireless	RY2	●	●	–	–

Changes to individual option availability and combinations may occur depending on vehicle specification choices and the continuing evolution and adaptation of our product range.
These changes may not be immediately reflected in this document as they occur, but will be introduced at the next revision opportunity.

Equipment (standard and optional overview).

● Standard ○ Optional — Not available

RETURN TO START

Category	Description	Option code	Rear-wheel drive PRO	Rear-wheel drive SELECT	Basic Price exc. VAT	Basic Price inc. VAT
Exterior Features (cont.)						
Wheels	**Spare wheel bracket below frame end**	R65	●	●	–	–
	Spare wheel	R87	●	●	–	–
	Full wheel cover Not available for 5 tonne models.	RD8	○	○	£85.00	£102.00
	Light alloy wheels 6.5 J x 16 Not available for 5 tonne models.	RL5	○	○	£1,035.00	£1,242.00
	Light alloy wheels 6.5 J x 17 Not available for 5 tonne models.	RL7	○	○	£1,130.00	£1,356.00
	Steel wheels, arctic white	RM2	○	○	£80.00	£96.00
	Steel wheels 6.5 J x 16 Not available for 5 tonne models.	RS3	●	●	–	–
	Steel wheels 5.5 J x 16 Only for 3 tonne models.	RS6	●	●	–	–
	Hydraulic Jack	Y43	●	●	–	–
Interior Features						
Floor	**All-weather floormats**	V3L	○	○	£60.00	£72.00
	Crew cab floor assembly	V40	○	○	£315.00	£378.00
	Wood flooring	V43	●	●	–	–
Grab Handles	**Grab handle for inner seat, two-seater**	S78	○	○	£75.00	£90.00
	Handle for entrance	T74	○	○	£50.00	£60.00
	Grab handles for driver's and co-driver's doors	T75	●	●	–	–
	Grab handle, at load comp. sliding door on partition	T77	●	●	–	–
	Entrance handle on LH rear corner pillar	T85	●	●	–	–
	Entrance handle on RH rear corner pillar	T86	○	○	£55.00	£66.00

Changes to individual option availability and combinations may occur depending on vehicle specification choices and the continuing evolution and adaptation of our product range.
These changes may not be immediately reflected in this document as they occur, but will be introduced at the next revision opportunity.

Equipment (standard and optional overview).

● Standard ○ Optional — Not available

RETURN TO START

Category	Description	Option code	Rear-wheel drive PRO	Rear-wheel drive SELECT	Basic Price exc. VAT	Basic Price inc. VAT
Interior Features (cont.)						
Heating and Ventilation	**Roof-mounted air conditioning system, reinforced**	H08	○	○	£3,505.00	£4,206.00
	Auxiliary hot-air heater	H11	○	○	£1,655.00	£1,986.00
	Diesel-powered auxiliary air heater	H12	○	○	£1,010.00	£1,212.00
	Additional heat exchanger	H13	○	○	£750.00	£900.00
	Electric roof fan II	H72	○	○	£575.00	£690.00
	Electrically powered hot-air auxiliary heater	HH2	○	●	£195.00	£234.00
	THERMOTRONIC automatic climate control	HH4	○	○	£545.00	£654.00
	Roof-mounted air conditioning system, basic	HH7	○	○	£1,350.00	£1,620.00
	Air con., semi-autom. controlled, TEMPMATIC	HH9	●	●	–	–
	High-perf. roof-mounted air conditioning system	HK4	○	○	£4,810.00	£5,772.00
	Winter package Includes wet wiper system (FM3), seat heating for co-driver (H15) and heated seat for driver (H16)	F2W	○	○	£560.00	£672.00
	Winter Package Plus Includes wet wiper system (FM3), seat heating for co-driver (H15) and heated seat for driver (H16), Electrically powered hotair auxiliary heater (HH2), Steering wheel heating (CK8), Heat insulation (H04); in combination with CL3 only	P3Z	○	○	£1,040.00	£1,248.00
Mirrors	**Rear mirror inside**	F61	○	○	£65.00	£78.00
	Digital rear-view mirror	F84	○	○	£770.00	£924.00
Panelling	**Pallet support in sliding door step**	V24	○	○	£120.00	£144.00
	Window pillar panelling	V31	○	○	£735.00	£882.00
	Sidewall tie-down rails on waist rail	V42	○	○	£480.00	£576.00
Seating	**Seat heating for co-driver**	H15	○	○	£305.00	£366.00
	Heated seat for driver	H16	○	○	£225.00	£270.00
	Pre-install. seat belt reminder for driver's seat	J1D	○	○	£75.00	£90.00
	Pre-install. seat belt reminder for co-driver seat	J1E	○	○	£75.00	£90.00
	Driver's seat	S02	●	–	–	–
	Adjustable co-driver's seat Standard on 519 L3 models.	S04	○	○	£95.00	£114.00
	Armrest for driver's seat	S22	●	●	–	–
	Co-driver's double seat Optional on 519 L3 models.	S23	●	●	–	–

Changes to individual option availability and combinations may occur depending on vehicle specification choices and the continuing evolution and adaptation of our product range. These changes may not be immediately reflected in this document as they occur, but will be introduced at the next revision opportunity.

Equipment (standard and optional overview).

● Standard ○ Optional — Not available

RETURN TO START

Category	Description	Option code	Rear-wheel drive PRO	Rear-wheel drive SELECT	Basic Price exc. VAT	Basic Price inc. VAT
Interior Features (cont.)						
Seating (cont.)	**Armrest for co-driver's seat**	S25	○	○	£80.00	£96.00
	Armrest, driver's and co-driver's door	S28	○	○	£60.00	£72.00
	Comfort driver's seat	SB1	○	●	£180.00	£216.00
	Comfort co-driver's seat	SB2	○	○	£180.00	£216.00
	Suspension seat, comfort version, driver's seat	SB3	○	○	£595.00	£714.00
	Suspension seat, comfort version, co-driver's seat	SB4	○	○	£595.00	£714.00
	Driver's seat plus	SB9	○	○	£30.00	£36.00
	Lumbar support, co-driver's seat	SE4	○	○	£95.00	£114.00
	Lumbar support, driver's seat	SE5	○	●	£95.00	£114.00
	Driver's seat electrically adjustable	SF1	○	○	£1,215.00	£1,458.00
	Co-driver's seat electrically adjustable	SF2	○	○	£1,215.00	£1,458.00
	Convenience head restraint, driver's seat	SK0	○	●	£70.00	£84.00
	Convenience head restraint, co-driver	SK1	○	○	£140.00	£168.00
Steering wheel	**Multifunction steering wheel**	C6L	●	●	–	–
	Steering wheel heating	CK8	○	○	£155.00	£186.00
	Height and rake adjustable steering wheel	CL1	●	●	–	–
	Leather-cov. steering wheel and shift lever	CL2	○	●	£260.00	£312.00
	Leather steering wheel	CL3	○	○	£215.00	£258.00
Storage	**Mounting rails for roof rack**	D13	○	○	£300.00	£360.00
	Preinstallation for switch panel	E3J	○	○	£20.00	£24.00
	Coat hook in cab	F1K	●	●	–	–
	Omission of stowage compartment under cockpit	F3W	○	○	–	–
	1-DIN SLOT under dashboard, passenger side	FE9	○	○	£105.00	£126.00
	Cup holder in passenger compartment	FF3	○	○	£100.00	£120.00
	Shelf above roof trim	FF4	○	○	£230.00	£276.00
	Shelf above windscreen	FF5	●	●	–	–

Changes to individual option availability and combinations may occur depending on vehicle specification choices and the continuing evolution and adaptation of our product range.
These changes may not be immediately reflected in this document as they occur, but will be introduced at the next revision opportunity.

Equipment (standard and optional overview).

● Standard ○ Optional — Not available

RETURN TO START

Category	Description	Option code	Rear-wheel drive PRO	Rear-wheel drive SELECT	Basic Price exc. VAT	Basic Price inc. VAT
Interior Features (cont.)						
Storage (cont.)	**Single-size slot at front under roof liner**	FF8	○	○	£105.00	£126.00
	Cup holders front	FG8	○	●	£40.00	£48.00
	Hinged lid for stowage compartment	FJ1	○	●	£120.00	£144.00
	Stowage compartment underneath cockpit	FJ4	●	●	–	–
	Hinged lid for stowage compartments left and right	FJ5	○	○	£130.00	£156.00
	Stowage comp. above windscreen, driver side	FX0	○	○	£0.00	£0.00
	Stowage net on driver's seat backrest	SZ7	○	○	£60.00	£72.00
	Stowage net on co-driver's seat backrest	SZ8	○	○	£60.00	£72.00
	Cable duct on side wall	V94	●	●	–	–
	Load securing rail system	VV2	○	○	£465.00	£558.00
Trim	**Fabric Caluma black**	VF4	○	○	£75.00	£90.00
	ARTICO man-made leather, black	VF6	○	○	£75.00	£90.00
	Fabric Maturin black	VF7	●	●	–	–
Technology Software and Electrics						
Audio Entertainment	**Digital radio (DAB)**	E1D	●	●	–	–
	MBUX multimedia system	E7M	●	●	–	–
	Communication module (LTE) for digital services	JH3	●	●	–	–
Battery	**Additional battery f. retrofit consumers, interior**	E2I	○	○	£305.00	£366.00
	Battery main switch single-pole	E30	○	○	£135.00	£162.00
	Disconnecting relais if auxiliary battery	E36	○	○	£135.00	£162.00
	AGM battery, 12 V 70 Ah	ED1	○	○	£0.00	£0.00
	Heavy-duty battery	ED4	●	●	–	–
	Starting aid contact	ES0	●	●	-	–

Changes to individual option availability and combinations may occur depending on vehicle specification choices and the continuing evolution and adaptation of our product range.
These changes may not be immediately reflected in this document as they occur, but will be introduced at the next revision opportunity.

Equipment (standard and optional overview).

● Standard ○ Optional — Not available

RETURN TO START

Category	Description	Option code	Rear-wheel drive PRO	Rear-wheel drive SELECT	Basic Price exc. VAT	Basic Price inc. VAT
Technology Software and Electrics (cont.)						
Electronics	**Tray for smartphones incl. wireless charging**	E1B	○	○	£190.00	£228.00
	USB socket, 5 V	E1U	●	●	–	–
	Plug socket in cab	E46	○	○	£75.00	£90.00
	Smartphone Integration package Required for Apple CarPlay and Android Auto functionality	E4S	●	●	–	–
	Parameterizable special module	ED5	○	○	£470.00	£564.00
	Preinstallations electrical system, PSM	ED8	○	○	£30.00	£36.00
	Terminal strip for electrical connection	EK1	○	○	£55.00	£66.00
	2-way loudspeakers, front and rear	EL9	○	○	£0.00	£0.00
	Basic electric fitting for rear loudspeakers	EP7	○	○	£85.00	£102.00
	12 V plug socket in trunk / load compartment	ES2	○	○	£75.00	£90.00
	Charging package, dashboard	ES5	○	●	£120.00	£144.00
	Pre-installation: Remote Services Plus	EW6	●	●	–	–
	Instrument cluster with colour display	JK5	●	●	–	–
Keys	**Multi-button remote control**	FY7	○	○	£40.00	£48.00
Tachograph	**Controls for tachograph at front under roof liner** Optional on 3 tonne models.	H1B	●	●	–	–
	Tachograph control under dashboard, co-driver side	J2B	○	○	£0.00	£0.00
	Pre-installation, intelligent tachograph, EU	J4V	○	○	£430.00	£516.00
	Omission tachograph	J92	○	○	£0.00	£0.00
	Intelligent tachograph, EU Optional on 3 tonne models.	JD6	●	●	–	–
Driver's Assistance and Safety Equipment						
Airbags	**Airbag, front driver's seat**	SA5	●	●	–	–
	Airbag, co-driver	SA6	●	●	–	–
	Thorax-pelvis sidebag, driver	SH1	○	○	£305.00	£366.00
	Thorax-pelvis sidebag, co-driver	SH2	○	○	£305.00	£366.00
	Windowbags for driver and co-driver	SH9	○	○	£880.00	£1,056.00

Changes to individual option availability and combinations may occur depending on vehicle specification choices and the continuing evolution and adaptation of our product range.
These changes may not be immediately reflected in this document as they occur, but will be introduced at the next revision opportunity.

Equipment (standard and optional overview).

● Standard ○ Optional — Not available

RETURN TO START

Category	Description	Option code	Rear-wheel drive PRO	Rear-wheel drive SELECT	Basic Price exc. VAT	Basic Price inc. VAT
Driver's Assistance and Safety Equipment (cont.)						
Brake	**Electrical parking brake** Not available for 5 tonne models.	B25	○	○	£345.00	£414.00
	Active Brake Assist	BA3	●	●	–	–
	Handbrake lever, folding	BE2	○	○	£70.00	£84.00
	HOLD function	BH1	○	○	–	–
	Hill-Start Assist	E07	●	●	–	–
	Adaptive brake light	LE1	●	●	–	–
	Chock Optional on 3 and 4 tonne models.	Y26	○	○	£55.00	£66.00
Driver's Assistance	**Active Distance Assist DISTRONIC**	ET4	○	○	£675.00	£810.00
	WET WIPER SYSTEM	FM3	○	○	£130.00	£156.00
	Crosswind Assist	JA8	●	●	–	–
	Traffic Sign Assist	JA9	○	○	£350.00	£420.00
	Active Lane Keeping Assist	JB4	●	●	–	–
	Rain sensor	JF1	●	●	–	–
	Lane Keeping Assist	JW5	○	○	£0.00	£0.00
	ATTENTION ASSIST	JW8	●	●	–	–
	Comfort overhead control panel	LC4	●	●	–	–
	Cruise control	MS1	●	●	–	–
	Digital Owner's Manual	XO5	●	●	–	–
	First aid kit	Y10	○	○	£60.00	£72.00
	Fire extinguisher	Y16	○	○	£145.00	£174.00
	Warning triangle	Y44	○	○	£40.00	£48.00
Parking	**Reversing camera**	FR8	●	●	–	–
	Parking package with 360° camera	JB6	○	○	£1,590.00	£1,908.00
	Parking package with reversing camera	JB7	○	○	£1,165.00	£1,398.00
	Reversing warning device	JW0	○	○	£220.00	£264.00

Changes to individual option availability and combinations may occur depending on vehicle specification choices and the continuing evolution and adaptation of our product range.
These changes may not be immediately reflected in this document as they occur, but will be introduced at the next revision opportunity.

Equipment (standard and optional overview).

● Standard ○ Optional – Not available

RETURN TO START

Category	Description	Option code	Rear-wheel drive PRO	Rear-wheel drive SELECT	Basic Price exc. VAT	Basic Price inc. VAT
Driver's Assistance and Safety Equipment (cont.)						
Road speed limiters	**Linear speed limiter 90 km/h EG** Optional on 3 tonne models.	MD4	●	●	–	–
Safety	**Mercedes-Benz emergency call system**	EY5	●	●	–	–
	Breakdown management	EY6	●	●	–	–
	Seat belt reminder for co-driver seat	J55	●	●	–	–
	Seat belt warning for driver's seat	J58	●	●	–	–
	Temperature indicator	J65	●	●	–	–
	Blind Spot Assist	JA7	●	●	–	–
	Intelligent Speed Assistant	JS2	●	●	–	–
	Deactivation of bulb failure indicator	JW2	○	○	£45.00	£54.00
	Incorrect fuelling protection system	K51	○	○	£60.00	£72.00
	ECO start/stop function	MJ8	●	●	–	–
	Acoustic package	XM4	●	●	–	–
Security	**Anti-theft protection package**	FY1	●	●	–	–
	Double Lock	FY2	●	●	–	–
	VIN visible from outside	XC8	●	●	–	–
Lighting						
Lighting	**Lights for left hand traffic**	L10	●	●	–	–
	Fog lamps with cornering light function	L13	○	○	£245.00	£294.00
	Front fog lamps	L16	○	–	£245.00	£294.00
	Directional indicators on front wings	L44	○	○	£135.00	£162.00
	Interior light(s), load/pass. comp. wi. door cont.	L65	●	●	–	–
	Motion-sensor-controlled load comp. lighting	L71	○	○	£145.00	£174.00
	Omission parking lamp	L94	●	●	–	–
	Highbeam Assist	LA1	○	●	£340.00	£408.00

Changes to individual option availability and combinations may occur depending on vehicle specification choices and the continuing evolution and adaptation of our product range.
These changes may not be immediately reflected in this document as they occur, but will be introduced at the next revision opportunity.

Equipment (standard and optional overview).

● Standard ○ Optional – Not available

RETURN TO START

Category	Description	Option code	Rear-wheel drive PRO	Rear-wheel drive SELECT	Basic Price exc. VAT	Basic Price inc. VAT
Lighting (cont.)	**Headlight assistant**	LA2	●	●	–	–
	Side marker lights	LB1	●	●	–	–
	Additional flat turn signal lamps at rear of roof	LB3	○	○	£190.00	£228.00
	3rd brake light	LB5	●	●	–	–
	Exit lamps	LB9	○	○	£105.00	£126.00
	LED light strip in load compartment	LC2	○	○	£325.00	£390.00
	LED High Performance headlamps	LG7	○	●	£1,760.00	£2,112.00
Loading and Towing						
Gross Vehicle Weight (GVW)	**Weight variant 3.200 kg** Only for 3 tonne models.	X13	○	○	£0.00	£0.00
	Weight variant 3.500 kg Only for 5 tonne models.	X16	○	–	£0.00	£0.00
	Weight variant 4,600 kg Only for 5 tonne models.	XA4	○	○	£0.00	£0.00
	Weight variant 3.550 kg Only for 3 tonne models.	XG4	○	○	£575.00	£690.00
	Weight variant 4.250 kg Only for 5 tonne models.	XG5	○	○	£0.00	£0.00
	Weight variant 4.490 kg Only for 5 tonne models.	XG9	○	○	£0.00	£0.00
	Weight variant 5200 kg Only for 5 tonne models.	XH2	○	○	£650.00	£780.00
	Weight variant 5380 kg Only for 5 tonne (excl. L4) models.	XH3	○	○	£1,235.00	£1,482.00
	Weight variant 4.100 kg Only on 417 models.	XL2	○	–	£0.00	£0.00
	Weight variant 5.500 kg Optional on 5 tonne models.	XL4	○	○	£1,770.00	£2,124.00

Changes to individual option availability and combinations may occur depending on vehicle specification choices and the continuing evolution and adaptation of our product range.
These changes may not be immediately reflected in this document as they occur, but will be introduced at the next revision opportunity.

Equipment (standard and optional overview).

● Standard ○ Optional — Not available

Category	Description	Option code	Rear-wheel drive PRO	Rear-wheel drive SELECT	Basic Price exc. VAT	Basic Price inc. VAT
Loading and Towing (cont.)						
Towing	**Trailer socket, 13-pin**	E43	○	○	£295.00	£354.00
	Electrical components for trailer socket	E57	●	●	–	–
	Trailer coupling, rigid coupling head	Q22	○	○	£665.00	£798.00
	Trailer coupling ball headed removable	Q50	○	○	£895.00	£1,074.00
	Towing eye rear Only for 3 tonne models.	Q67	●	●	–	–
	Trailer coupling, 2.8 t trailer load, bolted Not available for 5 tonne models.	QA0	○	○	£1,285.00	£1,542.00
	Trailer coupling for increased towing capa. 3.5t	QA7	○	○	£1,515.00	£1,818.00
	Increased Towing capacity 2.8t/3.0t	QA8	○	○	£1,400.00	£1,680.00

Changes to individual option availability and combinations may occur depending on vehicle specification choices and the continuing evolution and adaptation of our product range. These changes may not be immediately reflected in this document as they occur, but will be introduced at the next revision opportunity.

Engine and gearbox.

RETURN TO START

	Euro 6e			Euro VI		
	x15	**x17**	**x19**	**x15**	**x17**	**x19**
Fuel	Diesel			Diesel		
Mixture preparation/injection method	Common-rail direct injection with twin stage turbocharging			Common-rail direct injection with twin stage turbocharging		
Cylinder arrangement	4cyl 16v			4cyl 16v		
Cubic capacity	1,950cc			1,950cc		
EU exhaust emission standard	Euro 6e			Euro VI		
Output, max. at 3,800rpm	150hp	170hp	190hp	150hp	170hp	190hp
Torque, max.	max. 340 Nm at 1,500 to 2,400 rpm	max. 400 Nm at 1,700 to 2,400 rpm	max. 450 Nm at 1,400 to 2,400 rpm	max. 340 Nm at 1,500 to 2,400 rpm	max. 400 Nm at 1,700 to 2,400 rpm	max. 450 Nm at 1,400 to 2,400 rpm
Fuel tank capacity	93 litres			93 litres		
AbBlue® capacity	22 litres			22 litres		
6-speed manual transmission	●	●	●	●	●	●
RWD	●	●	●	●	●	●
Alternator	14 V/250 A			14 V/250 A		
Battery	Heavy-duty battery (12 V 92 aH)			Heavy-duty battery (12 V 92 aH)		

● Standard ○ Optional — Not available

Fuel consumption, performance and CO_2 emissions.

RETURN TO START

Panel Van – PRO					
Model	WLTP Fuel Consumption (l/100km/**MPG**)				
	Combined	**Low (Extra Urban)**	**Medium (Urban)**	**High (Rural)**	**Extra High (Motorway)**
315 Van L2 H1 RWD	8.8/**32.1**	10.3/**27.4**	7.9/**35.7**	7.5/**37.6**	9.9/**28.5**
315 Van L2 H2 RWD	9.1/**31**	10.4/**27.1**	8.1/**34.8**	7.8/**36.2**	10.4/**27.1**
315 Van L3 H2 RWD	9.4/**30**	10.7/**26.4**	8.4/**33.6**	8/**35.3**	10.6/**26.6**
315 Van L4 H2 RWD	9.5/**29.7**	10.8/**26.1**	8.5/**33.2**	8.1/**34.8**	10.7/**26.4**
317 Van L2 H1 RWD	8.8/**32.1**	9.9/**28.5**	8/**35.3**	7.6/**37.1**	10/**28.2**
317 Van L2 H2 RWD	9.1/**31**	10/**28.2**	8.1/**34.8**	7.9/**35.7**	10.5/**26.9**
317 Van L3 H2 RWD	9.4/**30**	10.2/**27.6**	8.4/**33.6**	8.1/**34.8**	10.8/**26.1**
317 Van L4 H2 RWD	9.4/**30**	10.2/**27.6**	8.5/**33.2**	8.2/**34.4**	10.8/**26.1**
319 Van L2 H1 RWD	10.5/**26.9**	11.3/**24.9**	9.1/**31**	9/**31.3**	12.2/**23.1**
319 Van L2 H2 RWD	10.5/**26.9**	11.3/**24.9**	9.1/**31**	9/**31.3**	12.2/**23.1**
319 Van L3 H2 RWD	10.5/**26.9**	11.3/**24.9**	9.1/**31**	9/**31.3**	12.2/**23.1**
319 Van L4 H2 RWD	10.5/**26.9**	11.3/**24.9**	9.1/**31**	9/**31.3**	12.2/**23.1**
417 Van L2 H2 RWD	8.3/**34**	10.8/**26.1**	8.3/**34**	7.8/**36.2**	7.8/**36.2**
417 Van L3 H2 RWD	8.6/**32.8**	11/**25.6**	8.6/**32.8**	8.1/**34.8**	8/**35.3**
417 Van L4 H2 RWD	8.7/**32.4**	11.1/**25.4**	8.7/**32.4**	8.1/**34.8**	8.1/**34.8**
515 Van L2 H2 RWD	11.8/**23.9**	12.7/**22.2**	10.7/**26.4**	10.3/**27.4**	13.4/**21**
515 Van L3 H2 RWD	11.8/**23.9**	12.7/**22.2**	10.7/**26.4**	10.3/**27.4**	13.4/**21**
515 Van L4 H2 RWD	11.8/**23.9**	12.7/**22.2**	10.7/**26.4**	10.3/**27.4**	13.4/**21**
517 Van L2 H2 RWD	11.9/**23.7**	12.9/**21.8**	10.6/**26.6**	10.3/**27.4**	13.8/**20.4**
517 Van L3 H2 RWD	11.9/**23.7**	12.9/**21.8**	10.6/**26.6**	10.3/**27.4**	13.8/**20.4**
517 Van L4 H2 RWD	11.9/**23.7**	12.9/**21.8**	10.6/**26.6**	10.3/**27.4**	13.8/**20.4**
519 Van L2 H2 RWD	12.7/**22.2**	13.9/**20.3**	11.5/**24.5**	11.1/**25.4**	14.4/**19.6**
519 Van L3 H2 RWD	12.7/**22.2**	13.9/**20.3**	11.5/**24.5**	11.1/**25.4**	14.4/**19.6**
519 Van L4 H2 RWD	12.7/**22.2**	13.9/**20.3**	11.5/**24.5**	11.1/**25.4**	14.4/**19.6**

Panel Van – SELECT					
Model	WLTP Fuel Consumption (l/100km/**MPG**)				
	Combined	**Low (Extra Urban)**	**Medium (Urban)**	**High (Rural)**	**Extra High (Motorway)**
315 Van L2 H1 RWD	8.8/**32.1**	10.3/**27.4**	7.9/**35.7**	7.5/**37.6**	9.9/**28.5**
315 Van L2 H2 RWD	9.1/**31**	10.4/**27.1**	8.1/**34.8**	7.8/**36.2**	10.4/**27.1**
315 Van L3 H2 RWD	9.4/**30**	10.7/**26.4**	8.4/**33.6**	8.1/**34.8**	10.6/**26.6**
315 Van L4 H2 RWD	9.5/**29.7**	10.8/**26.1**	8.5/**33.2**	8.1/**34.8**	10.7/**26.4**
317 Van L2 H1 RWD	8.8/**32.1**	9.9/**28.5**	8/**35.3**	7.6/**37.1**	10/**28.2**
317 Van L2 H2 RWD	9.1/**31**	10/**28.2**	8.2/**34.4**	7.9/**35.7**	10.5/**26.9**
317 Van L3 H2 RWD	9.4/**30**	10.2/**27.6**	8.4/**33.6**	8.1/**34.8**	10.8/**26.1**
317 Van L4 H2 RWD	9.5/**29.7**	10.2/**27.6**	8.5/**33.2**	8.2/**34.4**	10.8/**26.1**
319 Van L2 H1 RWD	10.5/**26.9**	11.3/**24.9**	9.1/**31**	9/**31.3**	12.2/**23.1**
319 Van L2 H2 RWD	10.5/**26.9**	11.3/**24.9**	9.1/**31**	9/**31.3**	12.2/**23.1**
319 Van L3 H2 RWD	10.5/**26.9**	11.3/**24.9**	9.1/**31**	9/**31.3**	12.2/**23.1**
319 Van L4 H2 RWD	10.5/**26.9**	11.3/**24.9**	9.1/**31**	9/**31.3**	12.2/**23.1**
515 Van L2 H2 RWD	11.8/**23.9**	12.7/**22.2**	10.7/**26.4**	10.3/**27.4**	13.4/**21**
515 Van L3 H2 RWD	11.8/**23.9**	12.7/**22.2**	10.7/**26.4**	10.3/**27.4**	13.4/**21**
515 Van L4 H2 RWD	11.8/**23.9**	12.7/**22.2**	10.7/**26.4**	10.3/**27.4**	13.4/**21**
517 Van L2 H2 RWD	11.9/**23.7**	12.9/**21.8**	10.6/**26.6**	10.3/**27.4**	13.8/**20.4**
517 Van L3 H2 RWD	11.9/**23.7**	12.9/**21.8**	10.6/**26.6**	10.3/**27.4**	13.8/**20.4**
517 Van L4 H2 RWD	11.9/**23.7**	12.9/**21.8**	10.6/**26.6**	10.3/**27.4**	13.8/**20.4**
519 Van L2 H2 RWD	12.7/**22.2**	13.9/**20.3**	11.5/**24.5**	11.1/**25.4**	14.4/**19.6**
519 Van L3 H2 RWD	12.7/**22.2**	13.9/**20.3**	11.5/**24.5**	11.1/**25.4**	14.4/**19.6**
519 Van L4 H2 RWD	12.7/**22.2**	13.9/**20.3**	11.5/**24.5**	11.1/**25.4**	14.4/**19.6**

All figures are based on a standard specification. The addition of factory options may affect CO_2 emissions and corresponding Road Fund Licence. The indicated values were determined according to the prescribed measurement method – Worldwide Harmonised Light Vehicle Test Procedure (WLTP). Figures shown may include options which are not available in the UK. Figures shown are for comparability purposes; only compare with other vans tested to the same technical procedures. Figures may not reflect real life driving results, which will depend upon a number of factors including factory-fitted options, accessories fitted (post registration), variations in weather, driving styles and vehicle load. Further information about the test used to establish fuel consumption and CO_2 figures can be found at https://www.mercedes-benz.co.uk/vans/en/WLTP

Fuel consumption, performance and CO_2 emissions.

RETURN TO START

Panel Van – PRO					
	WLTP CO2 emissions (g/km)				
Model	**Combined**	**Low-Speed**	**Medium-Speed**	**High-Speed**	**Extra High-Speed**
315 Van L2 H1 RWD	231	270	208	197	259
315 Van L2 H2 RWD	240	273	212	205	274
315 Van L3 H2 RWD	246	280	220	211	279
315 Van L4 H2 RWD	248	283	222	213	281
317 Van L2 H1 RWD	231	260	209	198	261
317 Van L2 H2 RWD	239	262	213	206	276
317 Van L3 H2 RWD	246	267	221	212	282
317 Van L4 H2 RWD	248	268	223	214	284
319 Van L2 H1 RWD	274	297	239	236	319
319 Van L2 H2 RWD	274	297	239	236	319
319 Van L3 H2 RWD	274	297	239	236	319
319 Van L4 H2 RWD	274	297	239	236	319
417 Van L2 H2 RWD	219	282	218	205	206
417 Van L3 H2 RWD	225	288	225	211	210
417 Van L4 H2 RWD	227	290	228	213	212
515 Van L2 H2 RWD	310	332	282	271	352
515 Van L3 H2 RWD	310	332	282	271	352
515 Van L4 H2 RWD	310	332	282	271	352
517 Van L2 H2 RWD	313	338	277	269	362
517 Van L3 H2 RWD	313	338	277	269	362
517 Van L4 H2 RWD	313	338	277	269	362
519 Van L2 H2 RWD	333	365	300	291	376
519 Van L3 H2 RWD	333	365	300	291	376
519 Van L4 H2 RWD	333	365	300	291	376

Panel Van – SELECT					
	WLTP CO2 emissions (g/km)				
Model	**Combined**	**Low-Speed**	**Medium-Speed**	**High-Speed**	**Extra High-Speed**
315 Van L2 H1 RWD	231	270	209	198	259
315 Van L2 H2 RWD	240	273	213	206	274
315 Van L3 H2 RWD	247	281	220	212	280
315 Van L4 H2 RWD	249	283	222	214	281
317 Van L2 H1 RWD	231	260	209	199	261
317 Van L2 H2 RWD	240	262	214	206	276
317 Van L3 H2 RWD	246	267	221	213	282
317 Van L4 H2 RWD	248	268	224	214	284
319 Van L2 H1 RWD	274	297	239	236	319
319 Van L2 H2 RWD	274	297	239	236	319
319 Van L3 H2 RWD	274	297	239	236	319
319 Van L4 H2 RWD	274	297	239	236	319
515 Van L2 H2 RWD	310	332	282	271	352
515 Van L3 H2 RWD	310	332	282	271	352
515 Van L4 H2 RWD	310	332	282	271	352
517 Van L2 H2 RWD	313	338	277	269	362
517 Van L3 H2 RWD	313	338	277	269	362
517 Van L4 H2 RWD	313	338	277	269	362
519 Van L2 H2 RWD	333	365	300	291	376
519 Van L3 H2 RWD	333	365	300	291	376
519 Van L4 H2 RWD	333	365	300	291	376

All figures are based on a standard specification. The addition of factory options may affect CO_2 emissions and corresponding Road Fund Licence. The indicated values were determined according to the prescribed measurement method – Worldwide Harmonised Light Vehicle Test Procedure (WLTP). Figures shown may include options which are not available in the UK. Figures shown are for comparability purposes; only compare with other vans tested to the same technical procedures. Figures may not reflect real life driving results, which will depend upon a number of factors including factory-fitted options, accessories fitted (post registration), variations in weather, driving styles and vehicle load. Further information about the test used to establish fuel consumption and CO_2 figures can be found at https://www.mercedes-benz.co.uk/vans/en/WLTP

Weights and payloads.

RETURN TO START

Panel Van – PRO				
Model	**Gross Vehicle Weight (Kg)**	**Payload (Kg)**	**Kerb weight, with driver (Kg)***	**Gross Combination Weight (Kg)**
315 Van L2 H1 RWD	3,500	1,200	2,300	5,500
315 Van L2 H2 RWD	3,500	1,165	2,335	5,500
315 Van L3 H2 RWD	3,500	1,013	2,487	5,500
315 Van L4 H2 RWD	3,500	966	2,534	5,500
317 Van L2 H1 RWD	3,500	1,200	2,300	5,500
317 Van L2 H2 RWD	3,500	1,165	2,335	5,500
317 Van L3 H2 RWD	3,500	1,013	2,487	5,500
317 Van L4 H2 RWD	3,500	966	2,534	5,500
319 Van L2 H1 RWD	3,500	1,186	2,314	5,500
319 Van L2 H2 RWD	3,500	1,151	2,349	5,500
319 Van L3 H2 RWD	3,500	999	2,501	5,500
319 Van L4 H2 RWD	3,500	953	2,546	5,500
417 Van L2 H2 RWD	3,880	1,543	2,337	5,500
417 Van L3 H2 RWD	3,880	1,392	2,488	5,500
417 Van L4 H2 RWD	3,880	1,345	2,535	5,500
515 Van L2 H2 RWD	5,000	2,479	2,521	7,000
515 Van L3 H2 RWD	5,000	2,315	2,685	7,000
515 Van L4 H2 RWD	5,000	2,269	2,731	7,000
517 Van L2 H2 RWD	5,000	2,479	2,521	7,000
517 Van L3 H2 RWD	5,000	2,315	2,685	7,000
517 Van L4 H2 RWD	5,000	2,269	2,731	7,000
519 Van L2 H2 RWD	5,000	2,465	2,523	7,000
519 Van L3 H2 RWD	5,000	2,320	2,680	7,000
519 Van L4 H2 RWD	5,000	2,255	2,745	7,000

Panel Van – SELECT				
Model	**Gross Vehicle Weight (Kg)**	**Payload (Kg)**	**Kerb weight, with driver (Kg)***	**Gross Combination Weight (Kg)**
315 Van L2 H1 RWD	3,500	1,192	2,308	5,500
315 Van L2 H2 RWD	3,500	1,157	2,343	5,500
315 Van L3 H2 RWD	3,500	1,005	2,495	5,500
315 Van L4 H2 RWD	3,500	958	2,542	5,500
317 Van L2 H1 RWD	3,500	1,192	2,308	5,500
317 Van L2 H2 RWD	3,500	1,157	2,343	5,500
317 Van L3 H2 RWD	3,500	1,005	2,495	5,500
317 Van L4 H2 RWD	3,500	958	2,542	5,500
319 Van L2 H1 RWD	3,500	1,178	2,322	5,500
319 Van L2 H2 RWD	3,500	1,143	2,357	5,500
319 Van L3 H2 RWD	3,500	991	2,509	5,500
319 Van L4 H2 RWD	3,500	946	2,554	5,500
515 Van L2 H2 RWD	5,000	2,471	2,529	7,000
515 Van L3 H2 RWD	5,000	2,307	2,637	7,000
515 Van L4 H2 RWD	5,000	2,261	2,739	7,000
517 Van L2 H2 RWD	5,000	2,471	2,529	7,000
517 Van L3 H2 RWD	5,000	2,307	2,693	7,000
517 Van L4 H2 RWD	5,000	2,261	2,731	7,000
519 Van L2 H2 RWD	5,000	2,475	2,543	7,000
519 Van L3 H2 RWD	5,000	2,311	2,689	7,000
519 Van L4 H2 RWD	5,000	2,247	2,753	7,000

* Based on a driver weight of 75kg.

Dimensions.

REAR-WHEEL DRIVE – PANEL VAN 3.5 TONNE **L2 H2**

Wheelbase	Wheelbase length	3,665mm
	Turning circle	13.3m
	Front track width	1,726mm
	Rear track width	1,732mm
Vehicle	Length	5,932mm
	Height (unladen)	2,620mm
	Width (inc. wing mirrors)	2,345mm
	Ground clearance	162mm
Load compartment	Load floor length	3,375mm
	Load volume	10.5m³
	Max. width	1,787mm
	Height	2,009mm
	Width between wheel arches	1,350mm

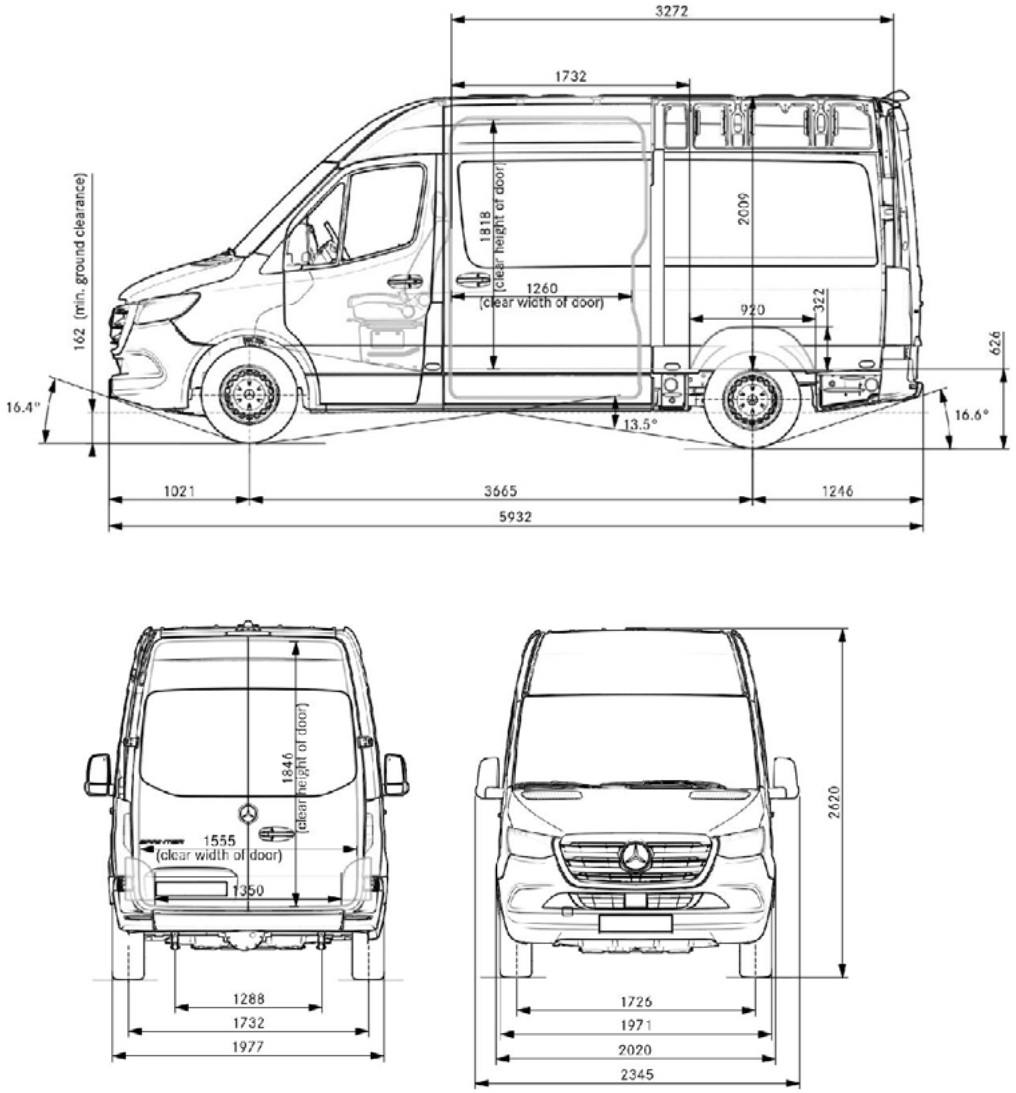

Dimensions.

REAR-WHEEL DRIVE – PANEL VAN 3.5 TONNE **L3 H2**

Wheelbase	Wheelbase length	4,325mm
	Turning circle	15.3m
	Front track width	1,726mm
	Rear track width	1,732mm
Vehicle	Length	6,967mm
	Height (unladen)	2,646mm
	Width (inc. wing mirrors)	2,345mm
	Ground clearance	188mm
Load compartment	Load floor length	4,410mm
	Load volume	14.0m³
	Max. width	1,787mm
	Height	2,009mm
	Width between wheel arches	1,350mm

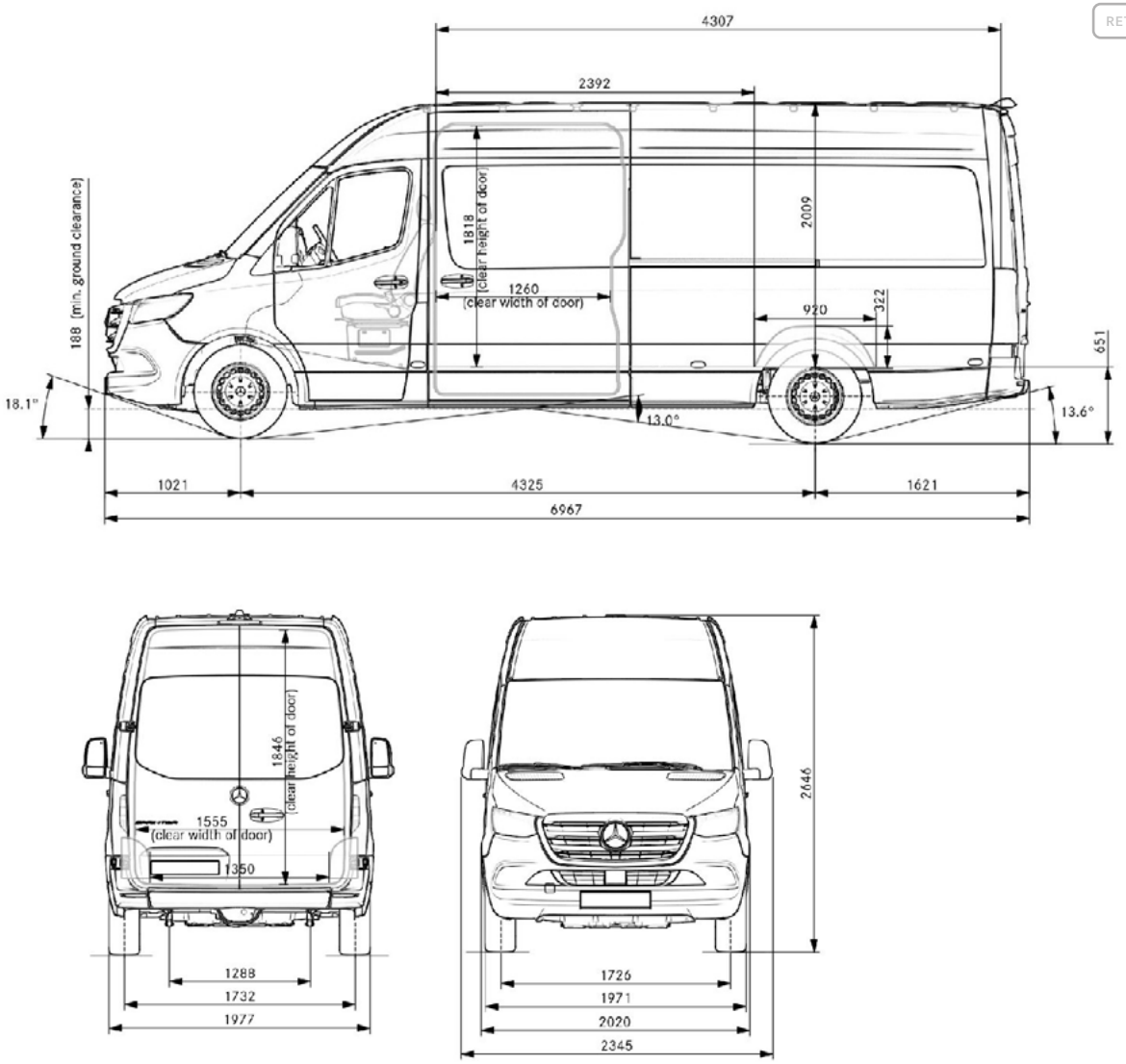

Dimensions.

REAR-WHEEL DRIVE – PANEL VAN 3.5 TONNE **L4 H2**

Wheelbase	Wheelbase length	4,325mm
	Turning circle	15.3m
	Front track width	1,726mm
	Rear track width	1,732mm
Vehicle	Length	7,367mm
	Height (unladen)	2,643mm
	Width (inc. wing mirrors)	2,345mm
	Ground clearance	188mm
Load compartment	Load floor length	4,810mm
	Load volume	15.5m³
	Max. width	1,787mm
	Height	2,009mm
	Width between wheel arches	1,350mm

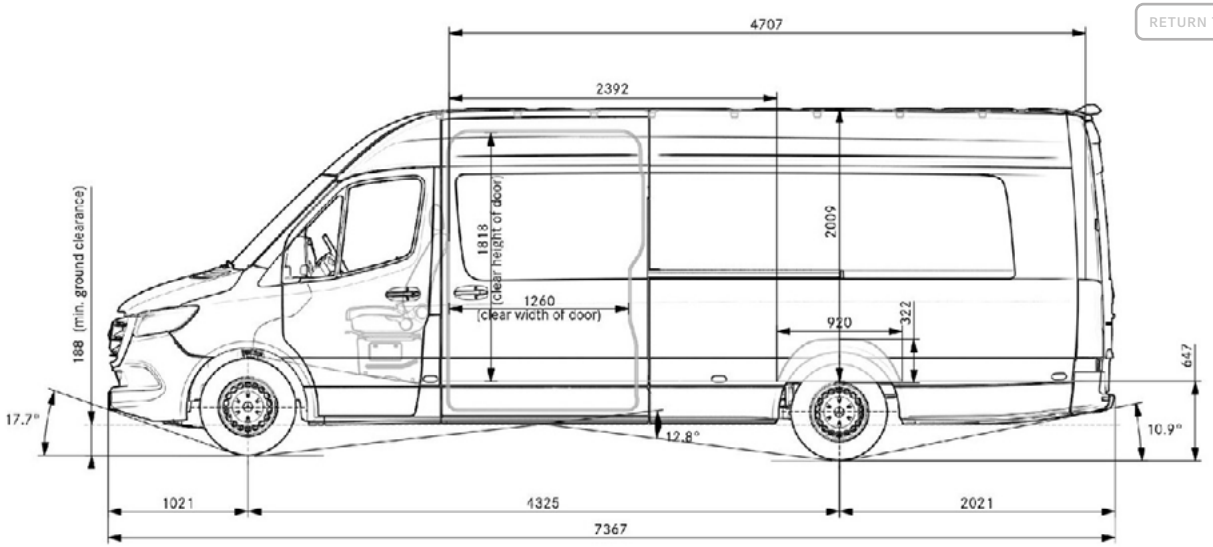

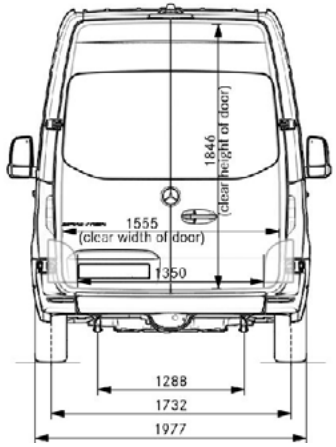

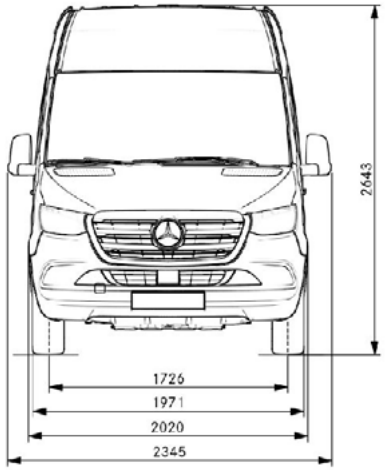

Dimensions.

REAR-WHEEL DRIVE – PANEL VAN 4 TONNE **L2 H2**

Wheelbase	Wheelbase length	3,665mm
	Turning circle	13.4m
	Front track width	1,713mm
	Rear track width	1,732mm
Vehicle	Length	5,932mm
	Height (unladen)	2,667mm
	Width (inc. wing mirrors)	2,345mm
	Ground clearance	165mm
Load compartment	Load floor length	3,375mm
	Load volume	10.5m³
	Max. width	1,787mm
	Height	2,009mm
	Width between wheel arches	1,350mm

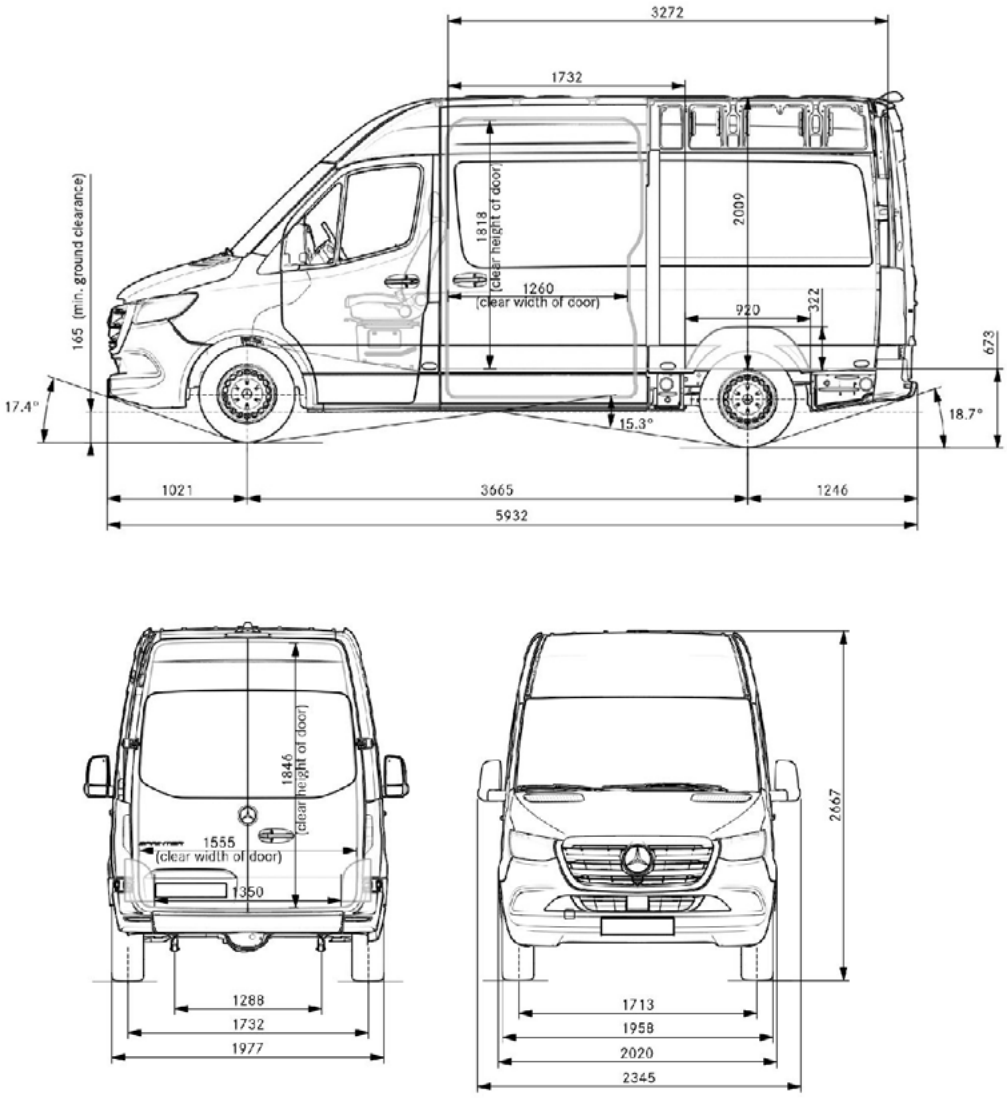

Dimensions.

REAR-WHEEL DRIVE – PANEL VAN 4 TONNE L3 H2

Wheelbase	Wheelbase length	4,325mm
	Turning circle	15.3m
	Front track width	1,713mm
	Rear track width	1,732mm
Vehicle	Length	6,967mm
	Height (unladen)	2,663mm
	Width (inc. wing mirrors)	2,345mm
	Ground clearance	165mm
Load compartment	Load floor length	4,410mm
	Load volume	14.0m³
	Max. width	1,787mm
	Height	2,009mm
	Width between wheel arches	1,350mm

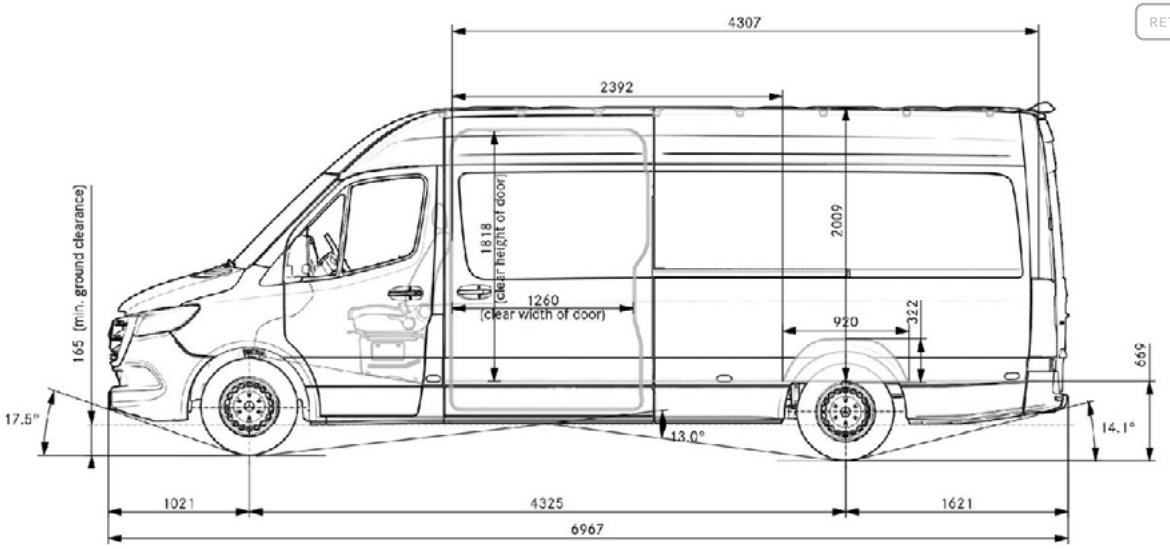

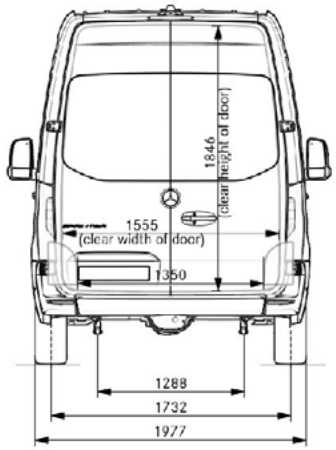

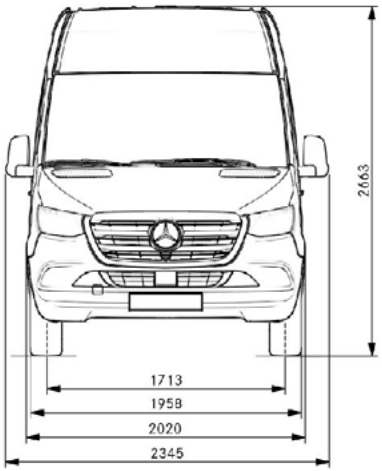

Dimensions.

REAR-WHEEL DRIVE – PANEL VAN 4 TONNE **L4 H2**

Wheelbase	Wheelbase length	4,325mm
	Turning circle	15.3m
	Front track width	1,713mm
	Rear track width	1,732mm
Vehicle	Length	7,367mm
	Height (unladen)	2,662mm
	Width (inc. wing mirrors)	2,345mm
	Ground clearance	164mm
Load compartment	Load floor length	4,810mm
	Load volume	15.5m³
	Max. width	1,787mm
	Height	2,009mm
	Width between wheel arches	1,350mm

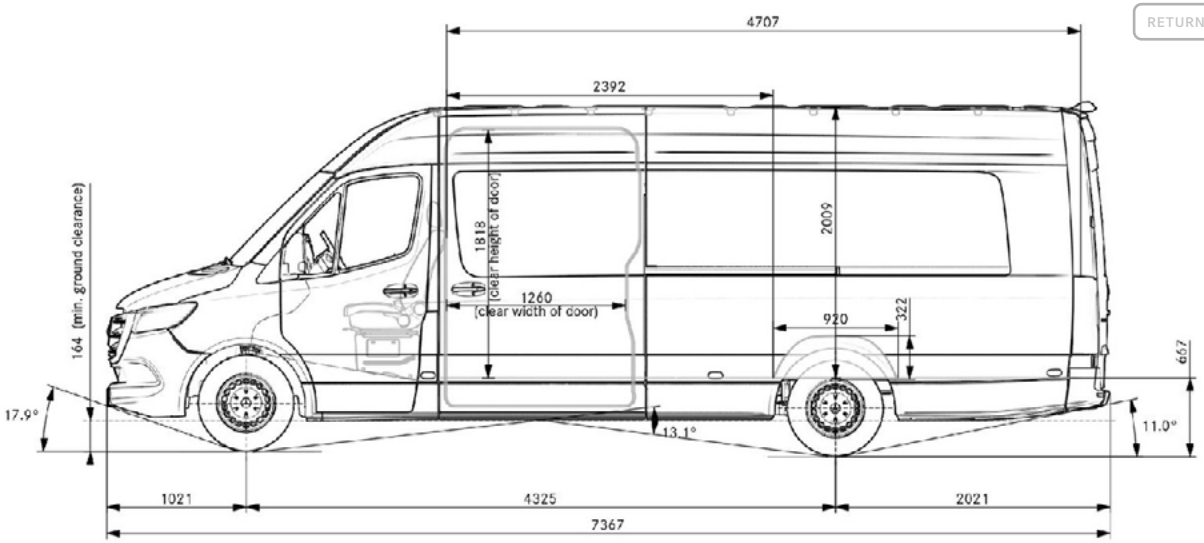

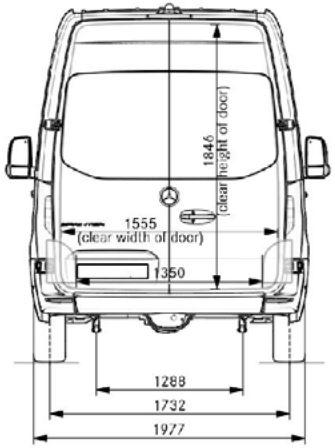

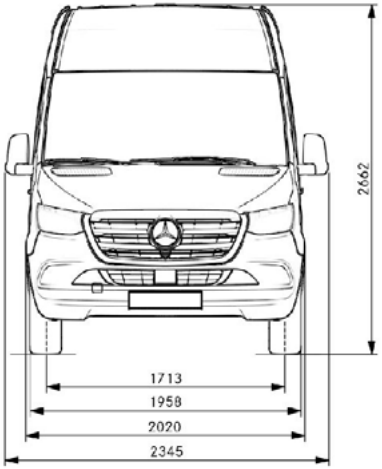

Dimensions.

REAR-WHEEL DRIVE – PANEL VAN 5 TONNE L2 H2

Wheelbase	Wheelbase length	3,665mm
	Turning circle	13.2m
	Front track width	1,685mm
	Rear track width	1,517mm
Vehicle	Length	5,932mm
	Height (unladen)	2,710mm
	Width (inc. wing mirrors)	2,345mm
	Ground clearance	176mm
Load compartment	Load floor length	3,375mm
	Load volume	10.5m³
	Max. width	1,787mm
	Height	2,009mm
	Width between wheel arches	978mm

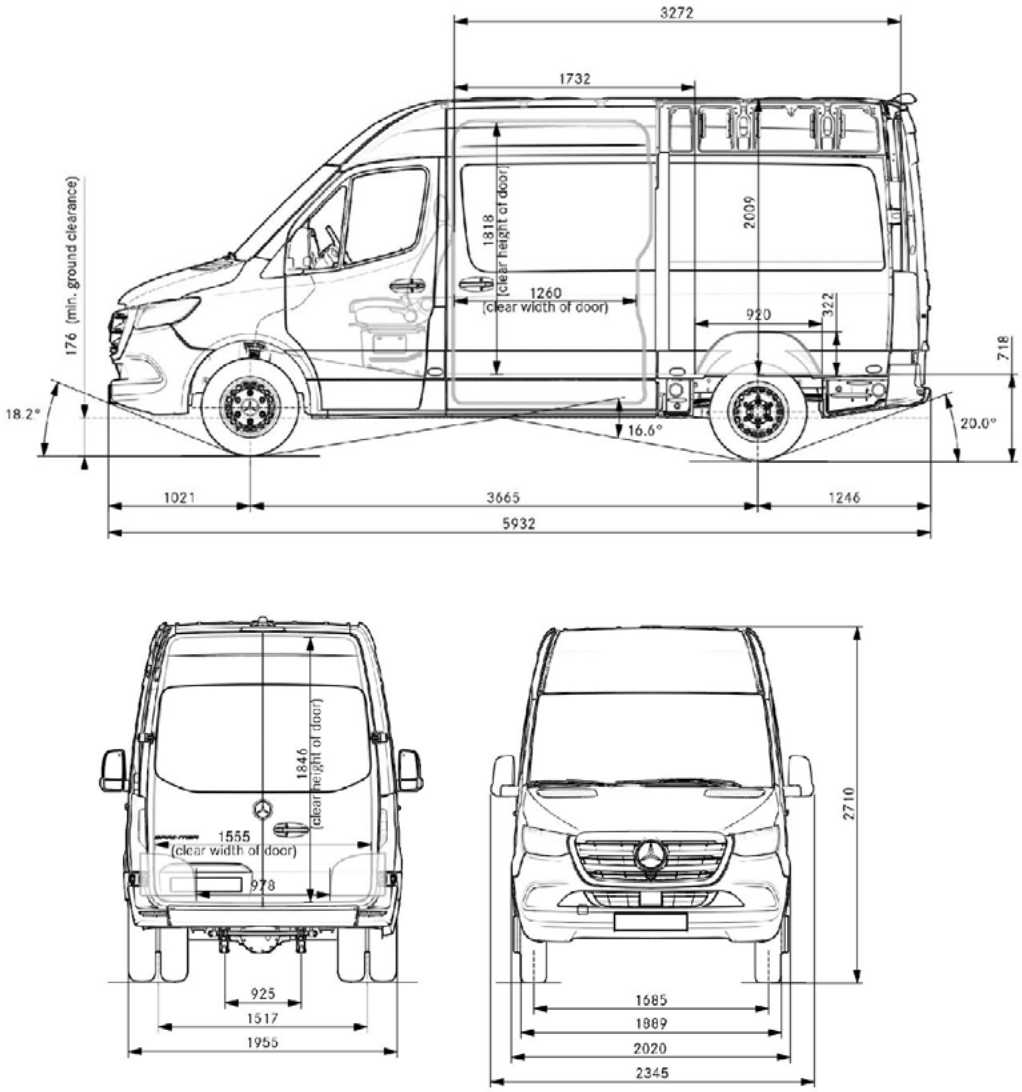

RETURN TO START

Dimensions.

REAR-WHEEL DRIVE – PANEL VAN 5 TONNE **L3 H2**

Wheelbase	Wheelbase length	4,325mm
	Turning circle	15.2m
	Front track width	1,685mm
	Rear track width	1,517mm
Vehicle	Length	6,967mm
	Height (unladen)	2,706mm
	Width (inc. wing mirrors)	2,345mm
	Ground clearance	176mm
Load compartment	Load floor length	4,410mm
	Load volume	14.0m³
	Max. width	1,787mm
	Height	2,009mm
	Width between wheel arches	978mm

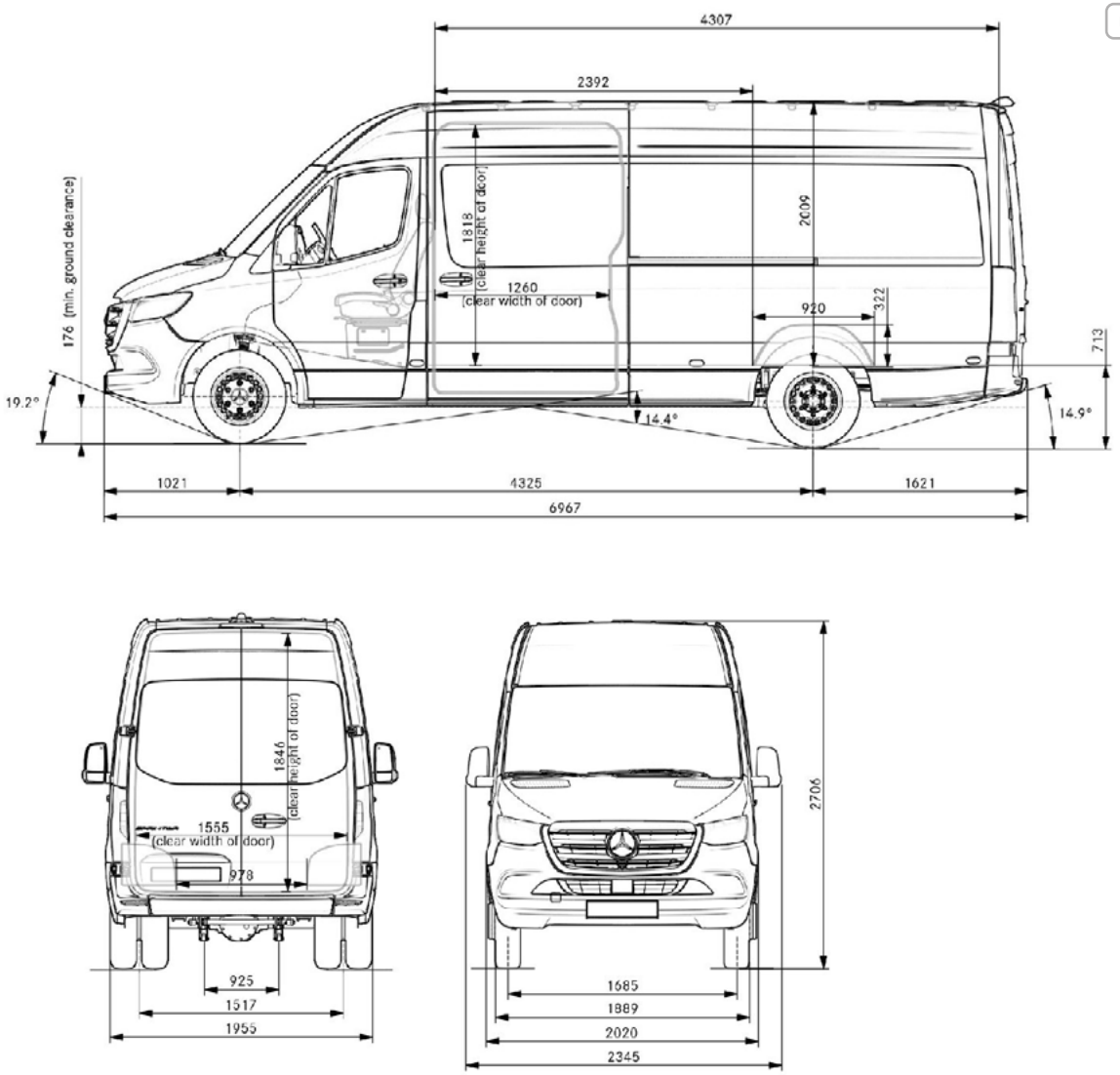

Dimensions.

REAR-WHEEL DRIVE – PANEL VAN 5 TONNE **L4 H2**

Wheelbase	Wheelbase length	4,325mm
	Turning circle	15.2m
	Front track width	1,685mm
	Rear track width	1,517mm
Vehicle	Length	7,367mm
	Height (unladen)	2,703mm
	Width (inc. wing mirrors)	2,345mm
	Ground clearance	176mm
Load compartment	Load floor length	4,810mm
	Load volume	15.5m³
	Max. width	1,787mm
	Height	2,009mm
	Width between wheel arches	978mm

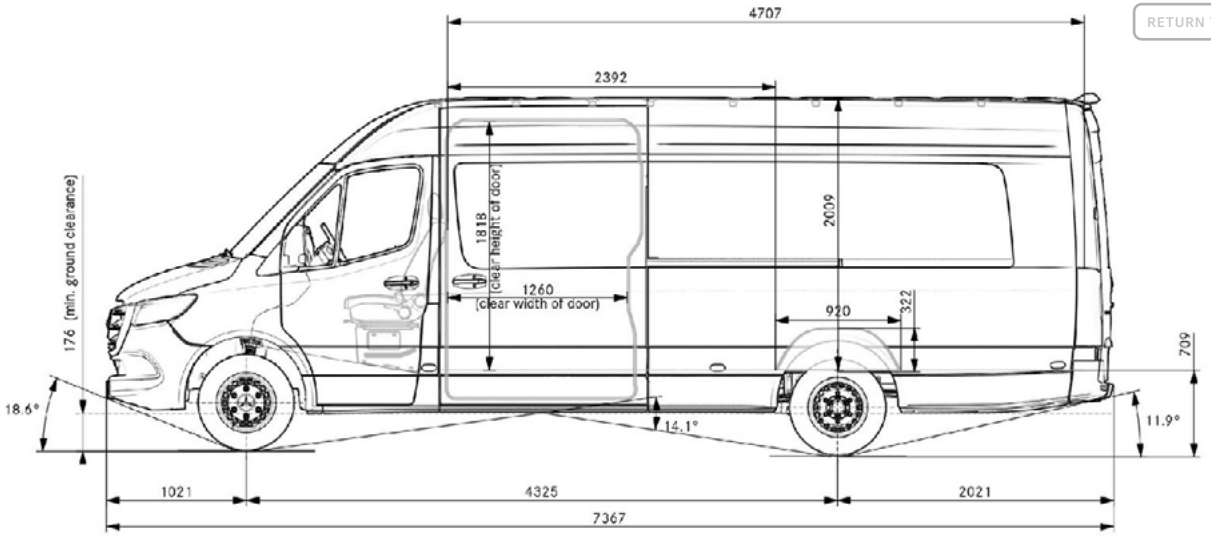

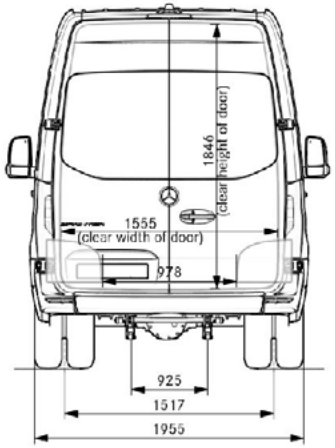

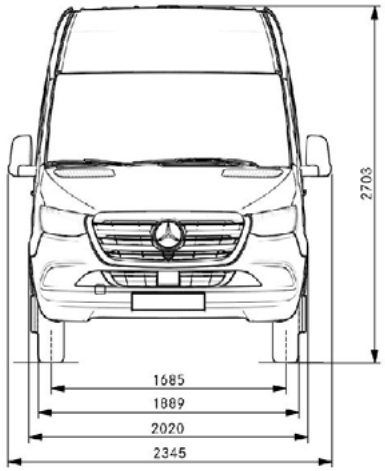

List prices.

RETURN TO START

Panel Van – PRO		
Model	**Basic Recommended Retail Price (Ex. VAT)**	**Basic Recommended Retail Price (Inc. VAT)**
315 Van L2 H2 RWD	£48,460	£58,152
315 Van L3 H2 RWD	£49,340	£59,208
315 Van L4 H2 RWD	£49,730	£59,676
317 Van L2 H2 RWD	£49,270	£59,124
317 Van L3 H2 RWD	£50,150	£60,180
317 Van L4 H2 RWD	£50,540	£60,648
319 Van L2 H2 RWD	£52,550	£63,060
319 Van L3 H2 RWD	£53,430	£64,116
319 Van L4 H2 RWD	£53,820	£64,584
417 Van L2 H2 RWD	£51,755	£62,106
417 Van L3 H2 RWD	£52,635	£63,162
417 Van L4 H2 RWD	£53,025	£63,630
515 Van L2 H2 RWD	£57,705	£69,246
515 Van L3 H2 RWD	£58,965	£70,758
515 Van L4 H2 RWD	£59,355	£71,226
517 Van L2 H2 RWD	£58,515	£70,218
517 Van L3 H2 RWD	£59,775	£71,730
517 Van L4 H2 RWD	£60,165	£72,198
519 Van L2 H2 RWD	£61,795	£74,154
519 Van L3 H2 RWD	£63,055	£75,666
519 Van L4 H2 RWD	£63,445	£76,134

Panel Van – SELECT		
Model	**Basic Recommended Retail Price (Ex. VAT)**	**Basic Recommended Retail Price (Inc. VAT)**
315 Van L2 H2 RWD	£51,155	£61,386
315 Van L3 H2 RWD	£52,035	£62,442
315 Van L4 H2 RWD	£52,425	£62,910
317 Van L2 H2 RWD	£51,965	£62,358
317 Van L3 H2 RWD	£52,845	£63,414
317 Van L4 H2 RWD	£53,235	£63,882
319 Van L2 H2 RWD	£55,245	£66,294
319 Van L3 H2 RWD	£56,125	£67,350
319 Van L4 H2 RWD	£56,515	£67,818
515 Van L2 H2 RWD	£60,400	£72,480
515 Van L3 H2 RWD	£61,660	£73,992
515 Van L4 H2 RWD	£62,050	£74,460
517 Van L2 H2 RWD	£61,210	£73,452
517 Van L3 H2 RWD	£62,470	£74,964
517 Van L4 H2 RWD	£62,860	£75,432
519 Van L2 H2 RWD	£64,490	£77,388
519 Van L3 H2 RWD	£65,750	£78,900
519 Van L4 H2 RWD	£66,140	£79,368

This document is for guidance only and must be used in conjunction with a configuration tool prior to final specification decisions and vehicle quotations being prepared and accepted. List prices are quoted ex-factory unless otherwise stated. Delivery charges excluding VAT will be added to model prices quoted in this document. Prices based on standard finish paint choice. Mercedes-Benz Vans UK and authorised Dealers reserve the right to alter specification and vary prices without notice. The availability of options may depend on the chosen base vehicle and other optional equipment specified, and should be confirmed with your Mercedes-Benz Vans Dealer prior to order placement. VAT is calculated at the standard rate of 20%. Mercedes-Benz Vans UK Ltd, Tongwell, Milton Keynes MK15 8BA.

Mercedes-Benz Finance options.

RETURN TO START

Choose an agreement that suits you with Mercedes-Benz Finance.

At Mercedes-Benz Finance we understand what it takes to run a modern-day business. Because of this, we have a number of finance options ready to suit your business needs.

Agility (Personal Contract Plan)

Agility (Personal Contract Plan) is our most flexible method of financing. You drive the vehicle over a fixed term, with fixed monthly payments. And at the end of the agreement, you decide whether you want to:

- Buy another Mercedes-Benz.
- Purchase your van by paying the Optional Purchase payment (balloon) and Option to Purchase Fee.
- Return it to us.

As a business customer, your vehicle can also appear as an asset on your balance sheet.

For more information about Agility.

Hire Purchase

A straightforward route to ownership. This product allows you to spread the overall cost of your Mercedes-Benz over a fixed term.

As a business customer, your vehicle can also appear as an asset on your balance sheet.

For more information on Hire Purchase.

Operating Lease

A solution for those who want to drive one of our vehicles over a specific term, with fixed monthly rentals and without the commitment of ownership of the vehicle.

As a business customer, your vehicle can also appear as an asset on your balance sheet.

For more information on Operating Lease.

Contract Hire

A solution for those who want to drive one of our vans over a specific term, with fixed monthly rentals and without the need to commit to ownership of the vehicle. This includes the cost of your Vehicle Excise Duty (also known as Road Fund Licence) for the duration of your agreement.

As a business customer, your vehicle can also appear as an asset on your balance sheet.

For more information on Contract Hire.

Finance Lease

Finance Lease gives you the ability to enjoy driving a Mercedes-Benz Van for a fixed time without the option of ownership. With this option you lease your vehicle for a fixed period and for fixed monthly rentals.

As a limited company or PLC customer, your vehicle can also appear as an asset on your balance sheet.

For more information on Finance Lease.











› For more information about our finance options

The Mercedes-Benz App.

Monitor your van's status, location and security via your smartphone.

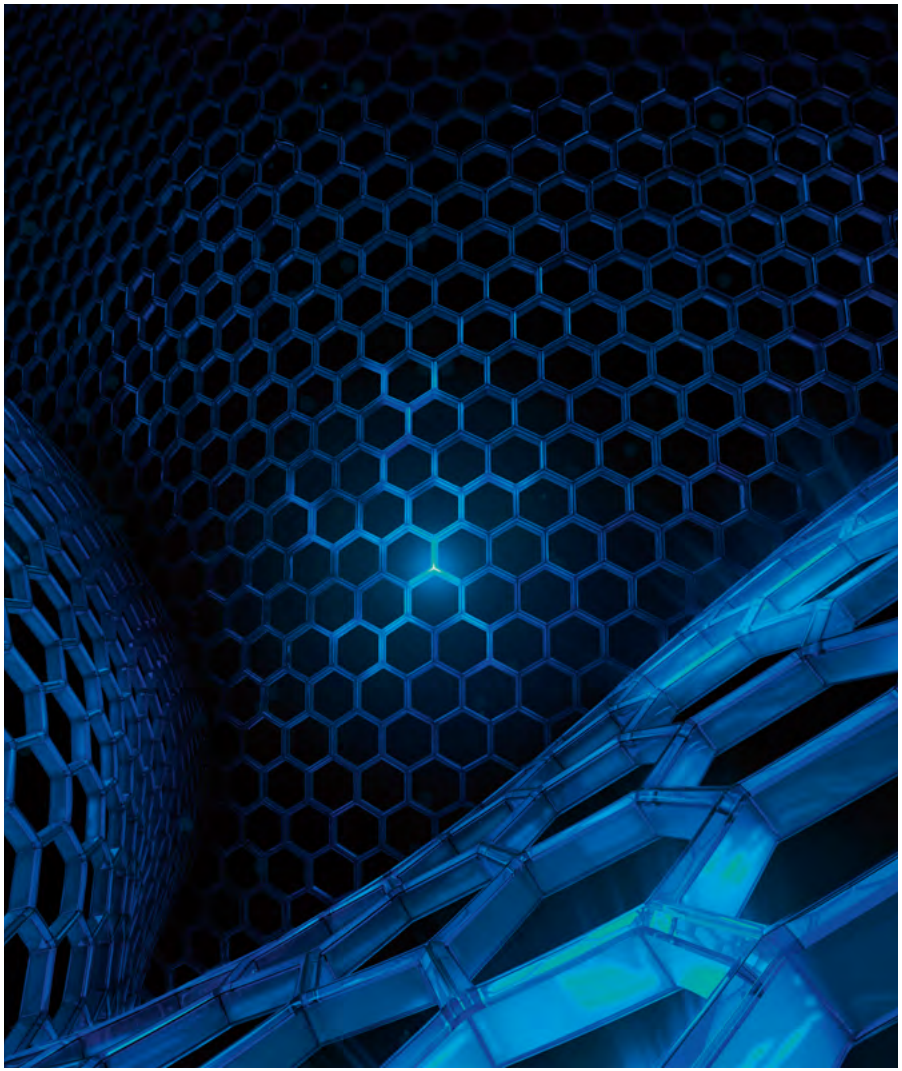

ASSISTANCE & AFTERCARE	**FREE**
Telediagnostics & Maintenance Management	Receive a notification when wear is detected on diagnostic-capable parts such as brake pads and get advance notice of when a service is due allowing you to plan your workshop visit well in advance to minimise any impact on your business.
Remote Vehicle Diagnostics	Your Dealer can assess your van's condition remotely allowing them to check if any other repairs are required ahead of a service.
Accident Recovery & Breakdown Management	Once an emergency call has been resolved or if you request breakdown assistance, further support is offered to help recover your van or to tow it to a Mercedes-Benz Service outlet.
Software updates	Over-the-air software updates are sent directly to your van's head unit. This means you'll always know your software is up to date and you'll save time by avoiding additional workshop visits.
VEHICLE SUPERVISION	**FREE FOR 3 YEARS**
Vehicle Tracker	See your van's location on the map in your app, making it easy to call or message your driver and re-route them to fit in another delivery or pick-up if a quicker route is available. The tracker is factory fitted equipment so it can't be easily removed if stolen.
Parked Vehicle Locator	If you're within 1 mile of your van's parked location, the app can generate the most convenient walking route – very handy if you're in unfamiliar surroundings and on a busy schedule.
REMOTE ACCESS	**FREE FOR 3 YEARS**
Remote Retrieval of Vehicle Status	Use your app to check on fuel level, tyre pressure, mileage and trip information. Not only does this help you plan your day's journeys, it can save you admin time on tasks such as logging your mileage for expenses.
Remote Door Locking & Unlocking	The app allows you to check if your van is locked. If you lock your keys in the van or need to give another driver access, you can do it via the app, from any distance away. For added peace of mind, you'll receive an email notification when your vehicle is unlocked.

Mercedes-Benz Approved Used vans. Get used to more...

More choice. More confidence. More quality – and more added extras.

As a Mercedes-Benz Approved Used customer, you'll have complete peace of mind as every van offers the same commitment to quality and workmanship as new and comes with:

12-24 month warranty option*

Free MOT test failure cover** covering you for £1,500

Minimum 3 months MOT

Free 24/7 breakdown cover and roadside assistance^

Comprehensive multi-point vehicle check

Discounted service plans

› **View our Dealer Networks Approved Used van stock**

*Warranty eligible up to 200,000 miles on approved used Mercedes-Benz Vans with less than 150,000 miles at point of sale. For full T&Cs, please speak to your preferred sales representative. ** MOT cover redeemable per 12-months warranty. £1,500 claims limit. For more information, please speak to your preferred sales representative. ^ Free for 12 months initially and renewed at each service, if serviced by MB according to service intervals for up to 30 years from when the vehicle was first registered. For a full list of exclusions and all product terms please visit mbvans.co.uk/mobilovan For full terms and conditions, please consult your local Dealer. Mercedes-Benz Van Insurance is a trading name of Mercedes-Benz Insurance Services UK Limited. Prices are correct at time of going to press 09/2024. All prices are subject to any fiscal or legislative changes.



What is an Approved Used van?

- Is no older than 6 years old
- Has less than 150,000 miles on the clock
- Is eligible for one of our flexible finance plans

› **Find more information and our latest Approved Used offers**

Ready to go electric?

› **Find our latest Approved Used Electric offers**

Service24: Demand more

The most comprehensive Aftercare package – for businesses that demand more.

Our 120-strong Dealer network works around the clock to service and maintain your vans and keep your business moving. It all adds up to more value, more flexibility and more confidence that you'll only find at an authorised Mercedes-Benz Dealer.



Flexible servicing and maintenance

Book your service online or by telephone, and as well as a standard 'drop and go' service with a courtesy van, you'll also get:

- Early bird, late night and weekend slots
- Mobile service
- Overnight service
- Collect & deliver service
- Express 1hr service
- Electric van service.

Find out more about service and repairs

Flexible ways to pay and save

With fixed, transparent national pricing there are no surprises with our services and repairs – plus you can fix, spread and reduce your service and maintenance costs, and ease your cashflow at the same time, with a payment plan.

- Pay as You Go
- ServiceCare Maintenance
- ServiceCare Flex (specifically for fleets)
- ServiceCare Complete.

Find out more about service options

3-year unlimited mileage warranty

Available on every new van, all service and maintenance – and any work required – is covered by your 3-year unlimited mileage warranty, and is only undertaken by Mercedes-Benz trained technicians using Mercedes-Benz GenuineParts.

Find out more about warranties

Free breakdown cover & roadside assistance*

Every van comes with free Europe-wide breakdown cover – MobiloVan. And with 3 years' cover on new vehicles for driver mishaps, no one goes further to keep your business moving.

- Trained technicians using only Mercedes-Benz GenuineParts
- Forward travel of load and crew is covered
- Driver mishap cover for the first 3 years, including out of charge cover or empty fuel tanks.

Find out more about MobiloVan

*For a full list of exclusions and all product terms please visit www.mercedes-benz.co.uk/vans/en/Owners/MobiloVan